DRILL CHART
A=1/4-20 TAP

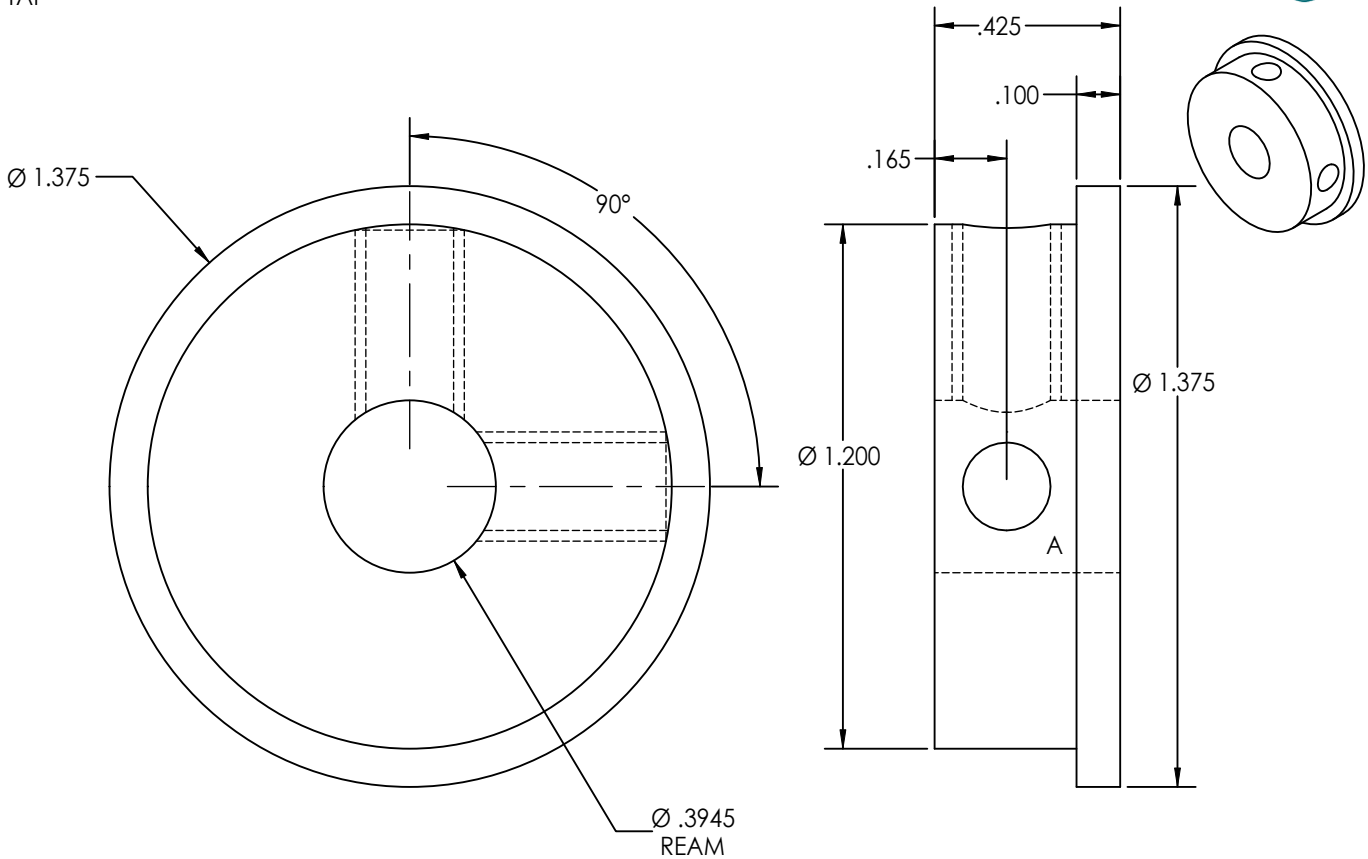

CTI SYSTEMS
by Concept Technologies